Ray Magic® QM submittal

Job_____ Designer_____ Contact_____

Ray Magic® QM (Quad Metal) is a high performance radiant ceiling panel for suspended ceiling grid system. It incorporates heating and cooling in a unique hydronic solution of high-end aesthetic, thermal and acoustic comfort, and energy saving. Ray Magic Quad Metal panels are available with hydronic serpentine (active) or without radiant activation (blank). Panes are available in different sizes, color and finishings, including micro-perforation for acoustical performance.

Technical specifications

Model

Ray Magic Quad Metal 24"x72"

Features

- Easy to install
- Very high heating and cooling performance
- High sound absorption (micro-perforated panel only)
- Up to 150 psi working pressure
- Antibacterial coating (optional)
- Environment-friendly and 100% recyclable

Suspension system

Ceiling grid 2'x6'

Edge profiles

Flat (15/16), Reveal 5/16 (15/16), Reveal 5/8 (15/16) and Fineline (9/16)

Size and weight

nominal size
W 24" (610 mm)
L 72" (1830 mm)
H 1¼" (32 mm)

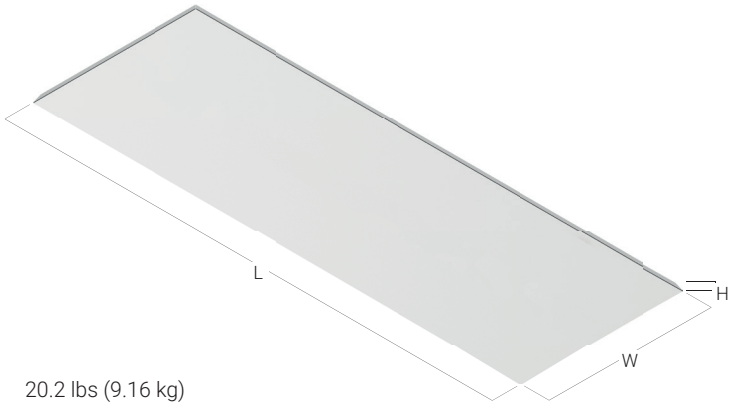

wet weight (with H_2O)	20.2 lbs (9.16 kg)
dry weight	20 lbs (9 kg)

Material

Manufactured in 3003 aluminum alloy or galvanized steel with thickness from 0.7 to 1 mm.

Color and finishing

Powder coated. White matte (RAL 9010 matte), also available in custom colors.

Flat smooth surface (solid) or acoustical with micro-holes perforation (square, strip of full).

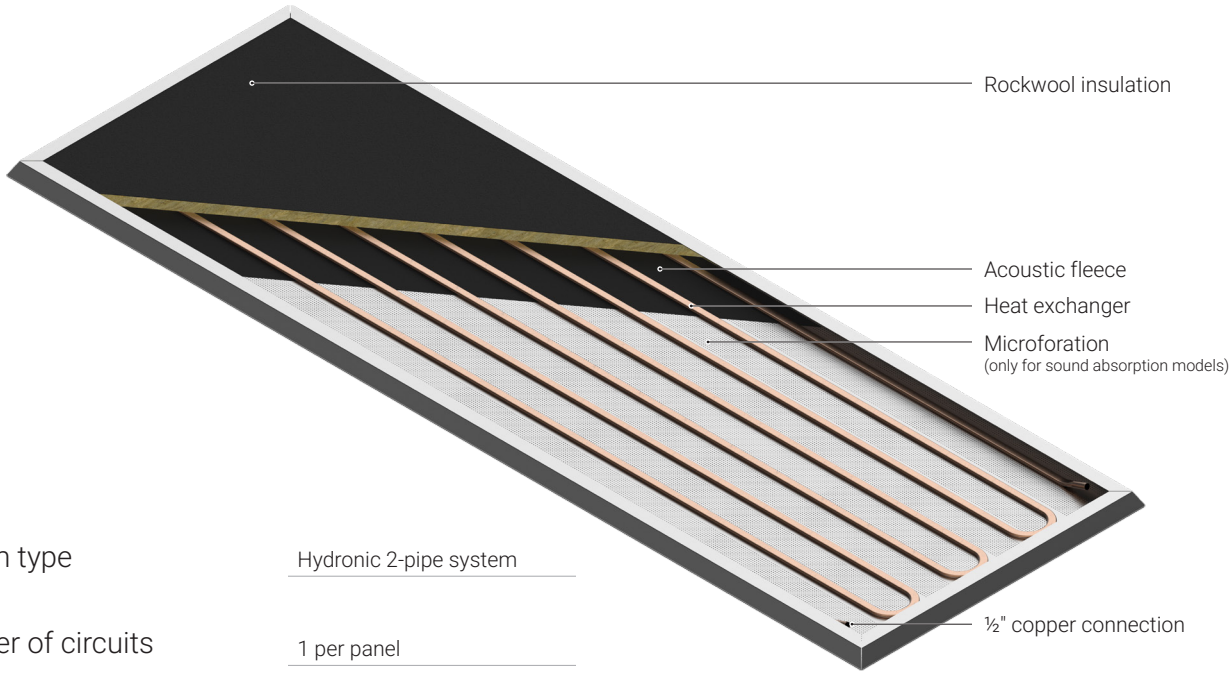

System type	Hydronic 2-pipe system	
Number of circuits	1 per panel	
Panel in series	Up to two panels can be connected in series	
Heat exchanger	1/2" copper pipe (12.7 mm) cold pressed into elliptical cross-section 9/16"x1/4" (15.2x6.1 mm). Terminated with 1/2" copper connection. Heat exchanger is bounded to the metal ceiling panel.	
	Radiant serpentine	3" o.c.
Connections	Terminal	1/2" copper connection
	Connection hose	1/2" x 27 ½" (700 mm) flex connection hoses. Push-in fitting with double o-ring.
Nominal flow rate	0.32 Gpm	
Pressure drop	2.20 inch of water	
Max operating pressure	145 psi	
Max operating temperature	180 F	
Cooling performance	Panel Cooling capacity	359.42 Btu/h/panel
		29.95 Btu/h/ft^2
	Room air temperature	74.0 F
	Entering fluid temperature	57.0 F
	Leaving fluid temperature	60.0 F
	Mean fluid temperature	58.5 F
	ΔT (T_{supply} - T_{return})	3.0 F

Notes

1. Size, weight, technical characteristics and properties may vary without prior notice.

Cut-sheets

The Ray Magic Quad Metal panels are available with various perforation patterns to offer multiple looks and meet different acoustical attenuation performance. Various custom patterns are available, the most common are illustrated below.

solid

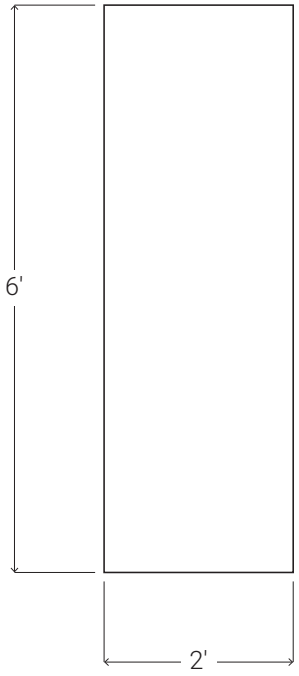

strip

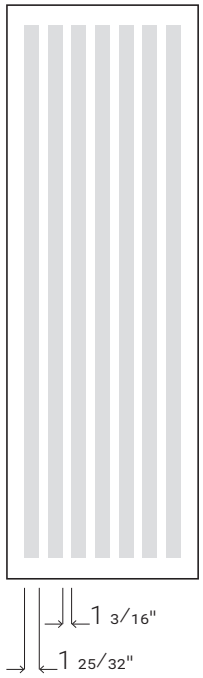

square

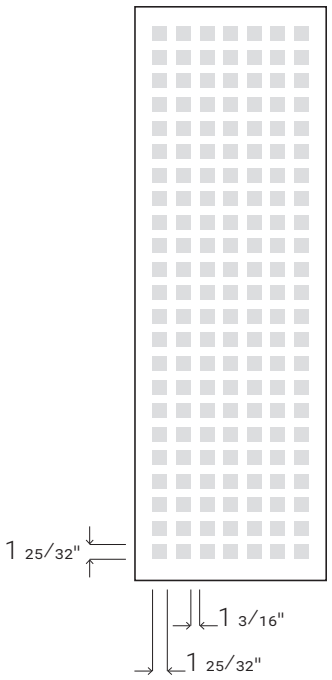

full

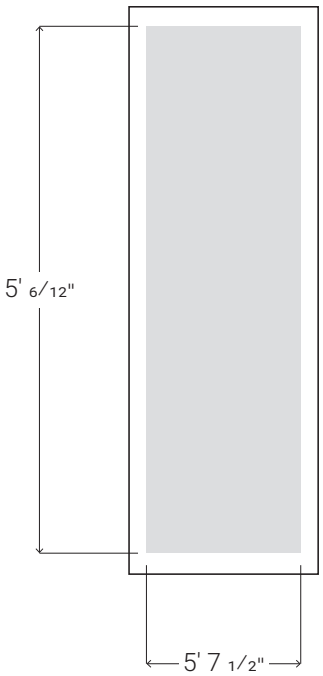

Perimeter moldings

The Ray Magic Quad Metal panels are available with there different perimeter moldings:

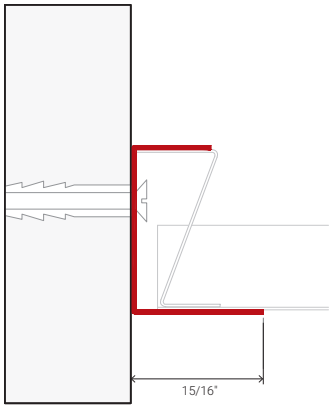

Channel molding

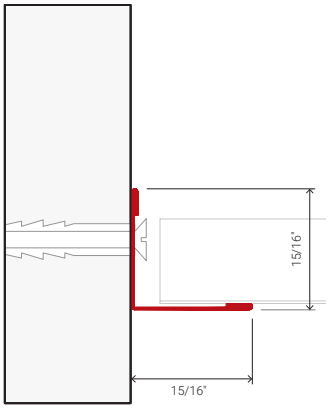

Angle molding

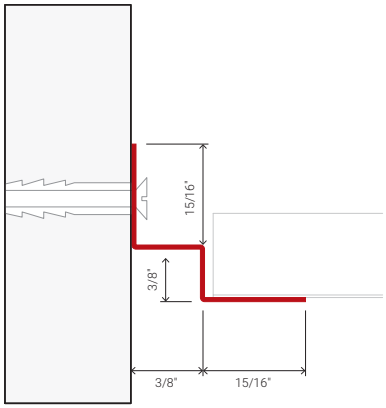

Shadow molding

Edge profiles

The Ray Magic Quad Metal panels are available with four different edge profiles: Flat (15/16), Reveal 5/16 (15/16), Reveal 5/8 (15/16) and Fineline (9/16).

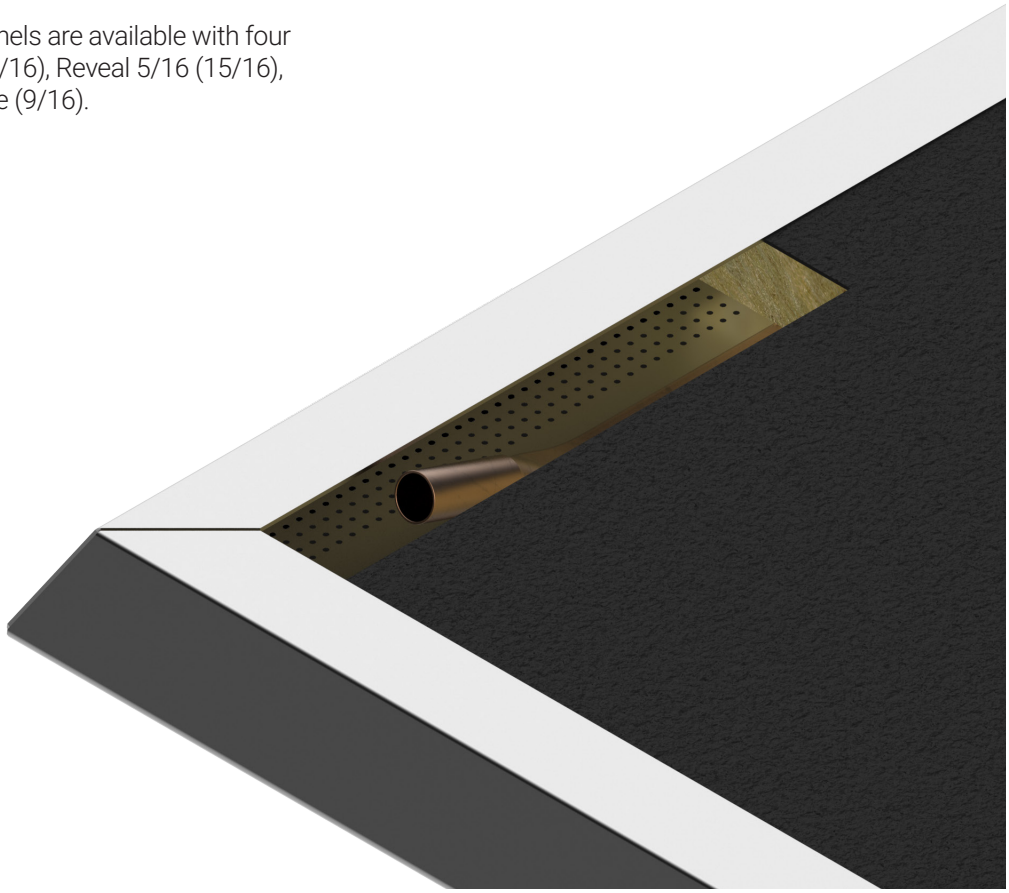

Flat (15/16 grid)

The panels hang on top of a suspended grid made with 15/16" tees. The panels lip, carved and pared away, allows the tiles to go to slush conferring an even finishing look to the ceiling. The panels can be open giving access to the plenum.

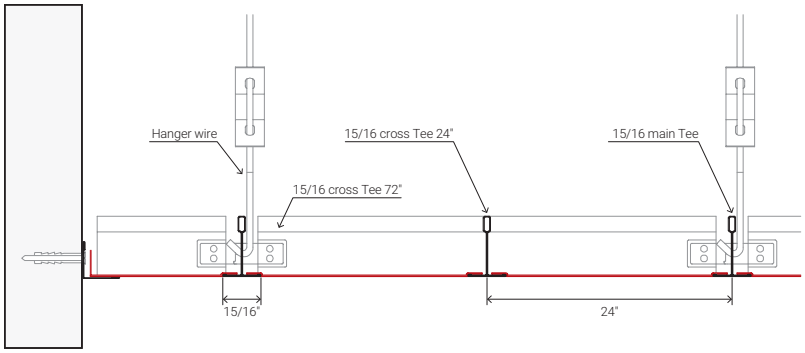

Section A-A

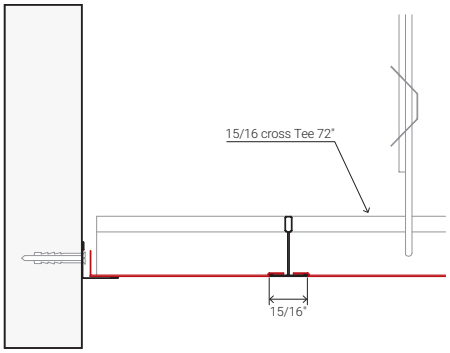

Section B-B

Reveal 5/16 (15/16 grid)

This panels have a bas-relief edges of 5/16" that rise up making a shadow between the panels.

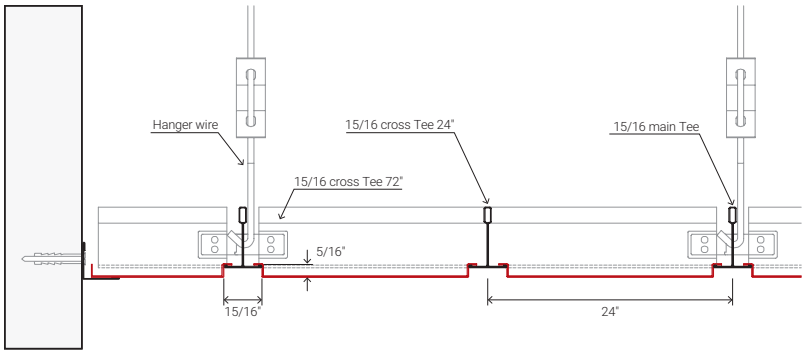

Section A-A

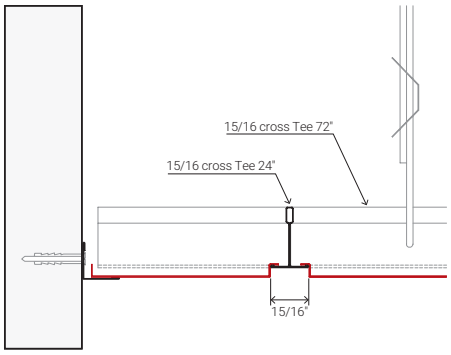

Section B-B

Revel 5/8 (15/16 grid)

This panels have a bas-relied edges of 5/8" that rise up making a shadow between the panels.

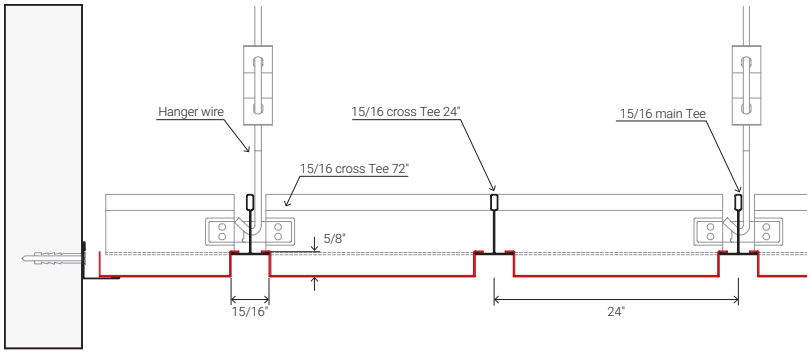

Section A-A

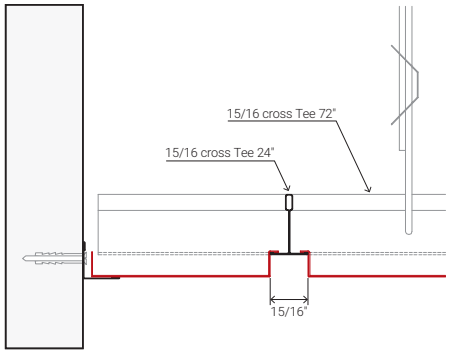

Section B-B

Fineline (9/16 grid)

This panels hang on top of a suspended grid made with 9/16" omega-shaped tees. The lip of the panels is carved to allow the panel to slush and shade of the omega-shaped tees gives a refined finish look to the ceiling.

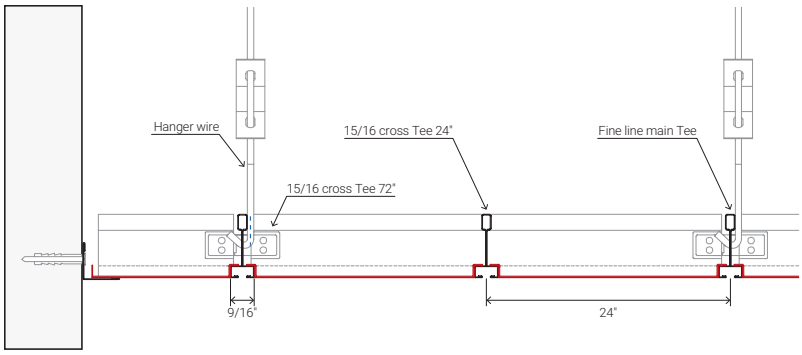

Section A-A

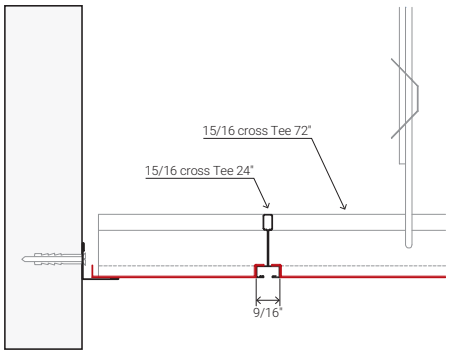

Section B-B

Thermal insulation (optional)

All Ray Magic Quad Metal radiant ceiling panels can be ordered with an insulation mat above the panel (heat exchanger side) choosing from one of the following options.

Thermal insulation type

Glass wool board	Glass wool board bonded to the panel with inorganic glue. Faced on one side with a natural glass tissue and in the other side with a black glass tissue. It is a natural product, totally formaldehyde free, and environment-friendly.	
	Thickness:	35 mm
	Conductibility λ:	0.034 W/mK
	Specific heat:	0.2 Kcal/Kg C
	Class of reaction to fire according to EN 13501-1:	A1
Polyester fiber	Polyester fiber coupled with black non-woven fabric to increase acoustic performance. Chemical, mildew and mold resistant. It is odorless, unalterable, and doesn't release fibers during processing, transportation and installation. Vapor-permeable and water-repellent. Available in white or black color.	
	Thickness:	20 mm
	Conductibility λ:	0.036 W/mK
	Specific heat:	0.2 Kcal/Kg C
	Class of reaction to fire according to EN 13501-1:	B s2 d0
	Acoustic coefficient alpha:	048 at 500 Hz
Fireproof fiberglass	Fiberglass mattress bonded with inorganic material free of formaldehyde independently from temperature. Coated on both sides with aluminum foil or black non woven glass and screened aluminum.	
	Thickness:	30 mm
	Conductibility λ:	0.034 W/mK
	Class of reaction to fire according to EN 13501-1:	A1
	Acoustic coefficient alpha:	0.55 at 500 Hz

Panel connections

Ray Magic Quad Metal panel is connected in series to other panels or to the supply and return headers with flexible hoses. Both connection pipes (1/2") are located on the same end of the panel unless requested differently in custom order.

Flexible hose

Type	Female coupling
Size	1/2" (12.7 mm)
Length	27 ½ " (700 mm)
Max operating pressure	145 psi (10 Bar)
EPDM rubber hose covered by stainless steel braided mesh.	
Push-in fitting with double o-ring seal and anti-extraction Sieger safety	
Silicone lubricant for the protection of the O-rings	

Thermal performance

Thermal cooling capacity according to the normative EN 12040

Specific cooling capacity refereed to the active panel surface (heat exchanger length multiplied by the panel width), in relation to the difference (ΔT) between the room air temperature and cooling fluid mean temperature.

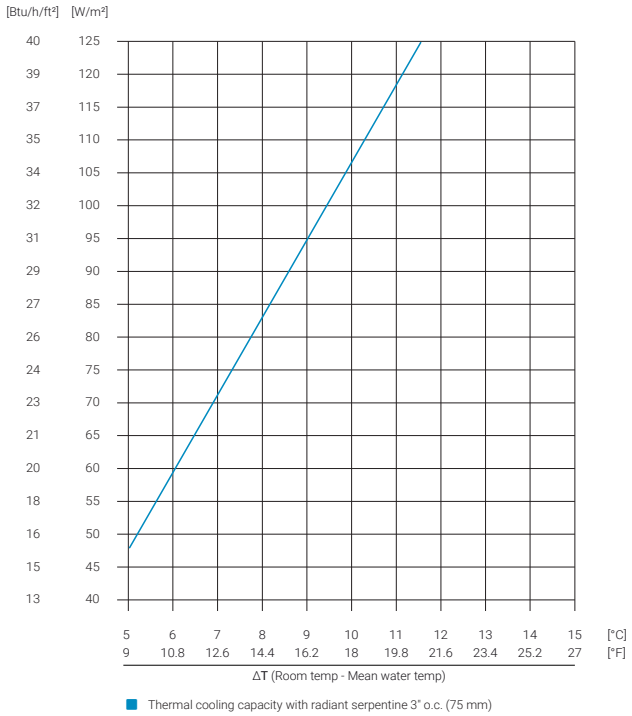

Thermal heating capacity according to the normative EN 14037

Specific heating capacity refereed to the active panel surface (heat exchanger length multiplied by the panel width), in relation to the difference (ΔT) between the heating fluid mean temperature and the room air temperature.

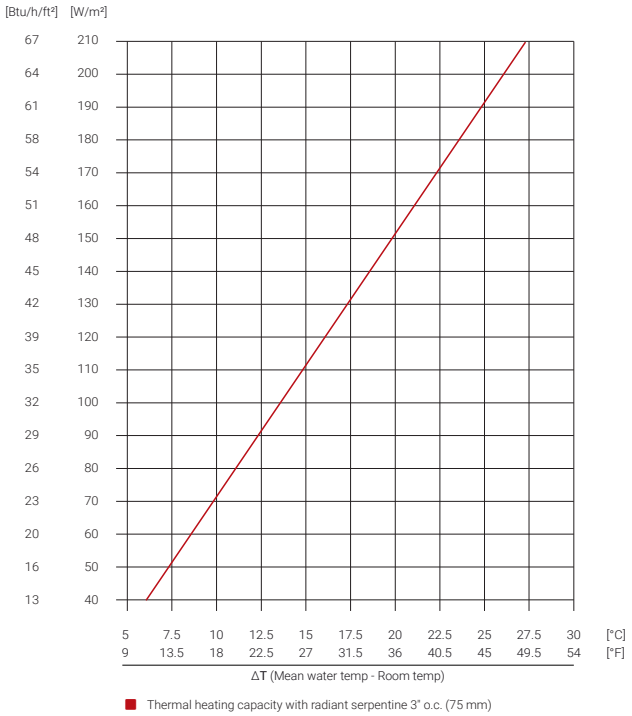

Correction factors

Based on the supply of primary air (ft^3/ft^2) use the correction factors in the graph below.

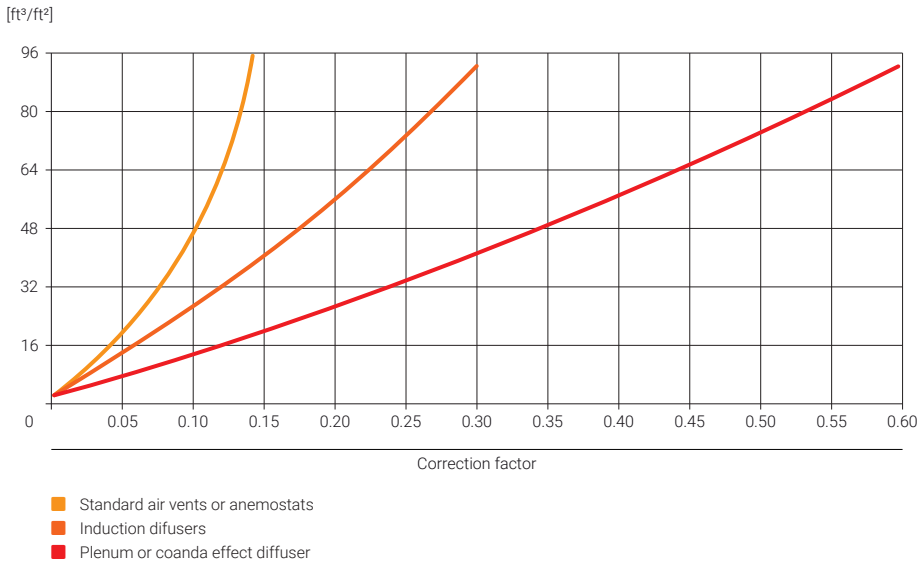

Thermal cooling performance tables

Ray Magic Quad Metal 24"x72" specific cooling capacity (Btu/h/ft^2) note

	Room air temperature [F]										
EWT [F]	70	71	72	73	74	75	76	77	78	79	80
46	46.68	49.14	51.60	54.05	56.51	58.97	61.54	64.00	66.46	69.03	71.49
47	44.23	46.68	49.14	51.60	54.05	56.51	58.97	61.54	64.00	66.46	69.03
48	41.89	44.23	46.68	49.14	51.60	54.05	56.51	58.97	61.54	64.00	66.46
49	39.43	41.89	44.23	46.68	49.14	51.60	54.05	56.51	58.97	61.54	64.00
50	37.09	39.43	41.89	44.23	46.68	49.14	51.60	54.05	56.51	58.97	61.54
51	34.63	37.09	39.43	41.89	44.23	46.68	49.14	51.60	54.05	56.51	58.97
52	32.29	34.63	37.09	39.43	41.89	44.23	46.68	49.14	51.60	54.05	56.51
53	29.95	32.95	34.63	37.09	39.43	41.89	44.23	46.68	49.14	51.60	54.05
54	27.61	29.95	32.29	34.63	37.09	39.43	41.89	44.23	46.68	49.14	51.60
55	25.27	27.61	29.95	32.29	34.63	37.09	39.43	41.89	44.23	46.68	49.14
56	23.05	25.27	27.61	29.95	32.29	34.63	37.09	39.43	41.89	44.23	46.68
57	20.71	23.05	25.27	27.61	29.95	32.29	34.63	37.09	39.43	41.89	44.23
58	18.49	20.71	23.05	25.27	27.61	29.95	32.29	34.63	37.09	39.43	41.89
59	16.26	18.49	20.71	22.93	25.27	27.61	29.95	32.29	34.63	37.09	39.43
60	14.04	16.26	18.49	20.71	22.93	25.27	27.61	29.95	32.29	34.63	37.09

Note: According to the normative EN 14240 with ΔT (Room temp - Mean water temp)=14.5 F and nominal flow rate equal to 0.32 Gpm.
Based on net active area of the panel equal to 83% of the total gross panel area.

Ray Magic Quad Metal 24"x72" cooling capacity per panel (Btu/h) note

	Room air temperature [F]										
EWT [F]	70	71	72	73	74	75	76	77	78	79	80
46	560.20	589.68	619.16	648.65	678.13	707.62	738.50	767.99	794.47	828.36	857.84
47	530.71	560.20	589.68	619.16	648.65	678.13	707.62	738.50	767.99	797.47	828.36
48	502.63	530.71	560.20	589.68	619.16	648.65	678.13	707.62	738.50	767.99	797.47
49	473.15	502.63	530.71	560.20	589.68	619.16	648.65	678.13	707.62	738.50	767.99
50	445.07	473.15	502.63	530.71	560.20	589.68	619.16	648.65	678.13	707.62	738.50
51	415.58	445.07	473.15	502.63	530.71	560.20	589.68	619.16	648.65	678.13	707.62
52	387.50	415.58	445.07	473.15	502.63	530.71	560.20	589.68	619.16	648.65	678.13
53	359.42	387.50	415.58	445.07	473.15	502.63	530.71	560.20	589.68	619.16	648.65
54	331.34	359.42	387.50	415.58	445.07	473.15	502.63	530.71	560.20	589.68	619.16
55	303.26	331.34	359.42	387.50	415.58	445.07	473.15	502.63	530.71	560.20	589.68
56	276.59	303.26	331.34	359.42	387.50	415.58	445.07	473.15	502.63	530.71	560.20
57	248.51	276.59	303.26	331.34	359.42	387.50	415.58	445.07	473.15	502.63	530.71
58	221.83	248.51	276.59	303.26	331.34	359.42	387.50	415.58	445.07	473.15	502.63
59	195.16	221.83	248.51	276.59	303.26	331.34	359.42	387.50	415.58	445.07	473.15
60	168.48	195.16	221.83	248.51	276.59	303.26	331.34	359.42	387.50	415.58	445.07

Note: According to the normative EN 14240 with ΔT (Room temp - Mean water temp)=14.5 F and nominal flow rate equal to 0.32 Gpm.
Based on net active area of the panel equal to 83% of the total gross panel area.

Perforation patterns

The Ray Magic Quad Metal panels are available with various perforation patterns to offer multiple looks and meet different acoustical attenuation performance. Various custom patterns are available, the most common are the following:

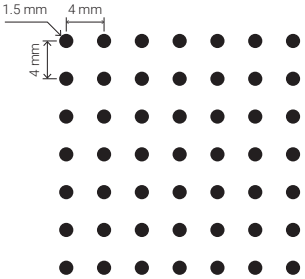

- hole diameter 1.5 mm
- regular hole direction
- perforated area 11%

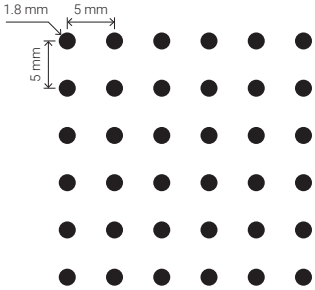

- hole diameter 1.8 mm
- regular hole direction
- perforated area 9.5%

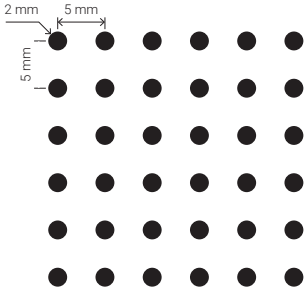

- hole diameter 2 mm
- regular hole direction
- perforated area 12.5%

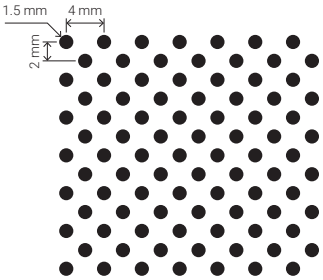

- hole diameter 1.5 mm
- 45 diagonal hole
- perforated area 22%

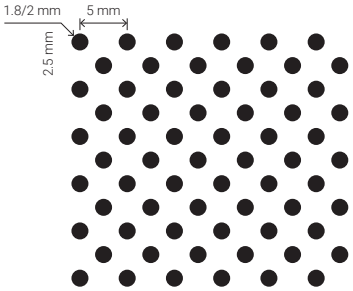

- hole diameter 1.8/2 mm
- 45 diagonal hole
- perforated area 19/25%

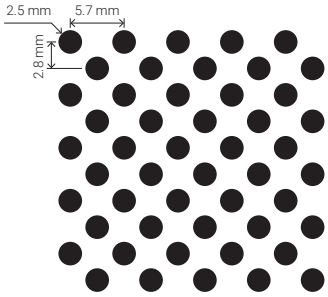

- hole diameter 2 mm
- 45 diagonal hole
- perforated area 30%

Acoustical absorption coefficient

The surrounding surfaces (walls and floors) of commercial space are normally made with hard and resistant materials to facilitate cleaning and maintenance. This means that they reflect sound waves.

The acoustic absorption factor of the suspended ceiling becomes therefore very important to achieve a good acoustic comfort. The sound absorption properties depend not only on the intrinsic characteristics of the material, but also on the installation characteristics (ceiling void height) and on the final composition of the suspended ceiling.

Messana Ray Magic Quad Metal panels can be manufactured with custom perforation patterns with different perforation area and micro-hole diameters. The perforation patterns are design in a way that do not interfere with the heat exchanger installed in the back side of the panel. In this way there is not reduction of sound absorption.

Above the heat exchanger, besides the insulation, sound shields or other sound-absorbing materials can be inserted to further improve the acoustic characteristics of the radiant ceiling.

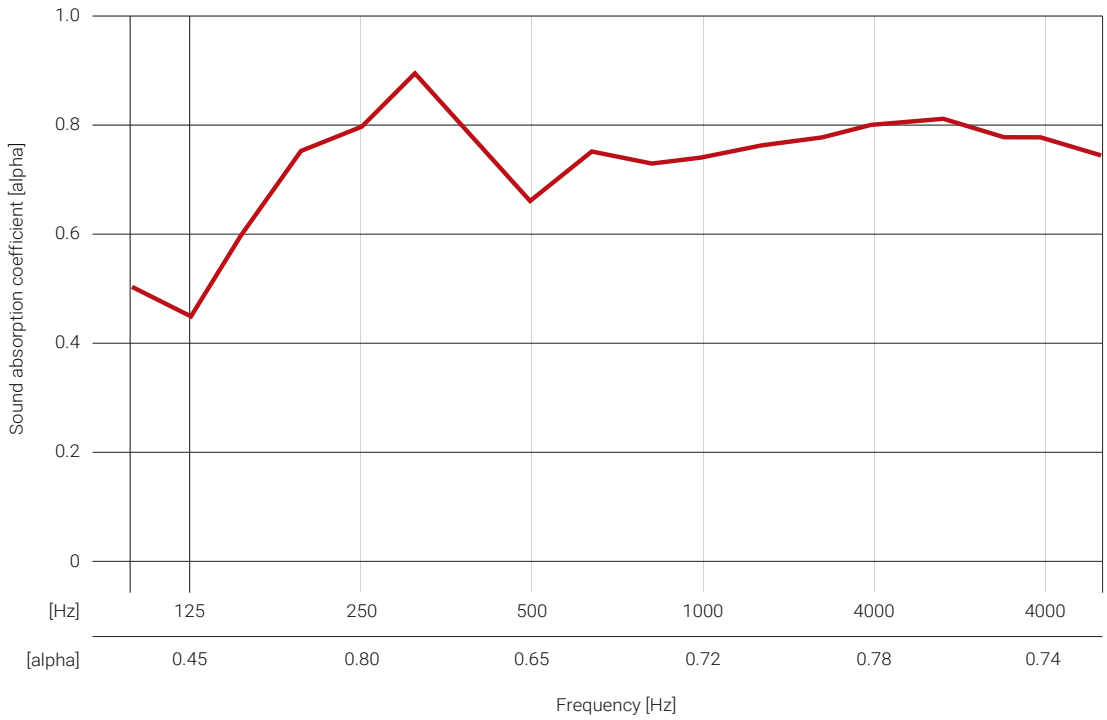

The graphic shows the sound absorption characteristics of a Ray Magic Quad Metal panel perforated in a striped pattern (2" of perforated area alternated with 1" of blank space) with 2.5 mm diameter hole (approx 3/32"). The perforation generates 16% of open area. The panels were covered with 30 mm of polyester fiber on the exchanger side. The drop ceiling was installed at 16" from the structural ceiling.

Custom cut-outs

The Ray Magic Quad Metal drop ceiling panels can be integrated with ceiling fixtures such as lighting, speakers, sprinklers and air diffusers.

If the fixtures requires a specific cut-out of reduced dimensions (up to 3"), the panels can be cut with a hole saw or a jigsaw on the job site during the installation.

If the fixture requires bigger cut-outs, it is preferable to custom order the panels with the cut-out factory precut. In this way, panels will be ready to be hanged on the grid eliminating any risk of damages during the installation.

Custom cut-outs are accurately designed and are manufactured with the cut edges coated.

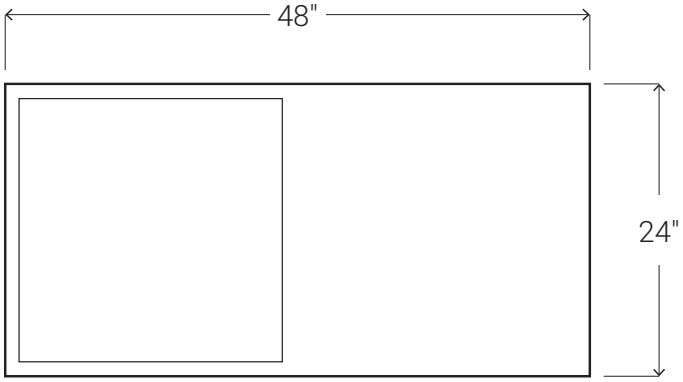

squared or rectangular cut-out

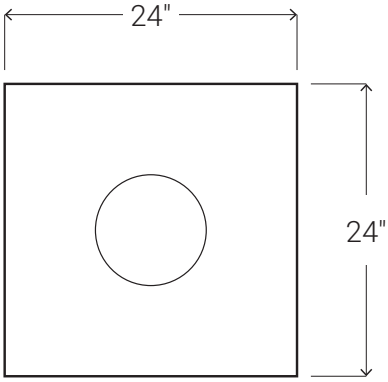

round cut-out

In case of custom cut-outs with perforated panels, the perforated areas might be distributed in rows, or squares over the entire surface of the panel. See drawings below as an example.

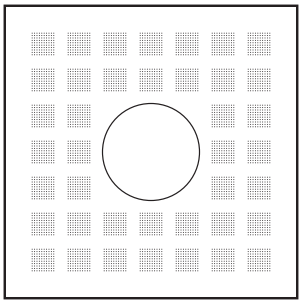

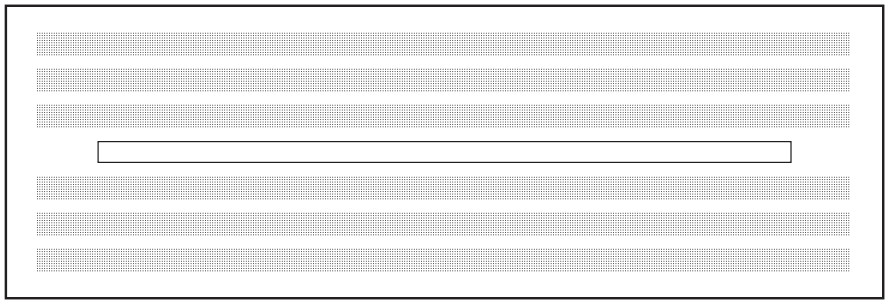

October 2023